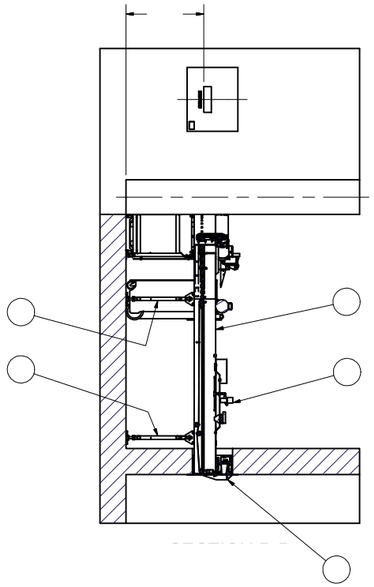

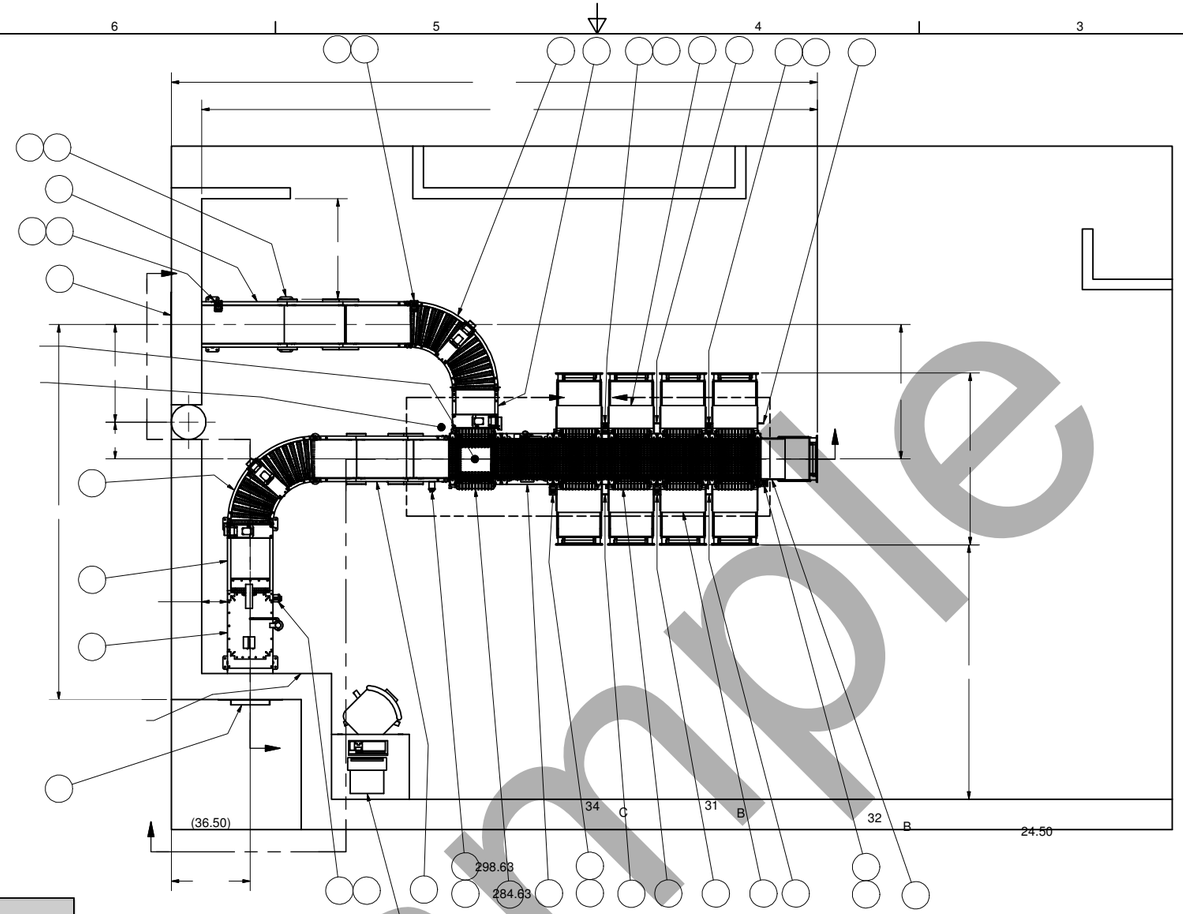

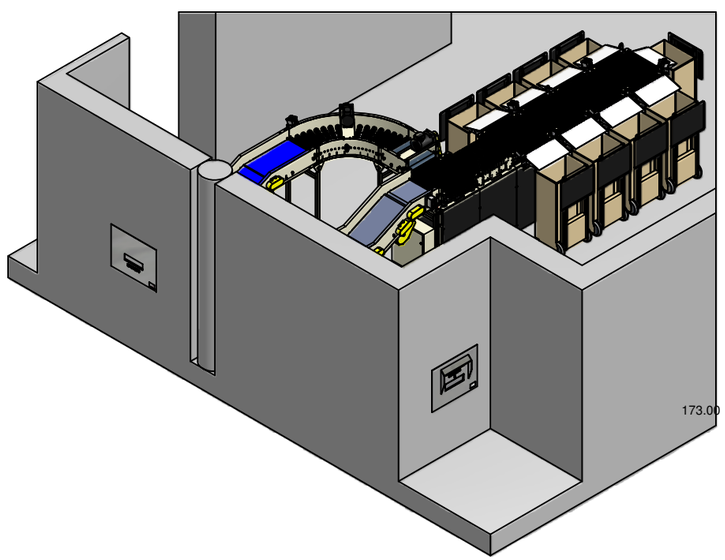

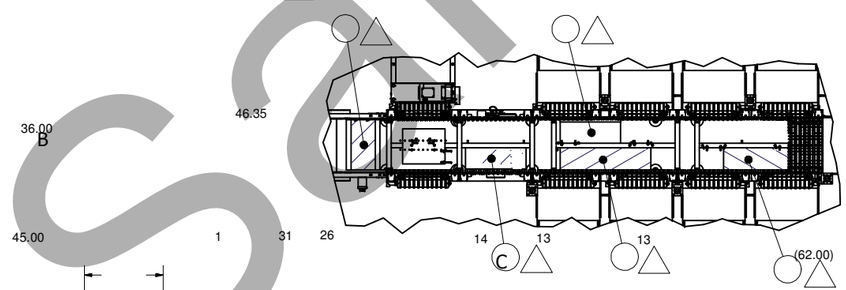

ELECTRICAL BOX
BREAK-OUT
DETAIL C
SCALE 1 / 25

BOOK DROP
ROUGH OPENNING
INTERIOR/EXTERIOR

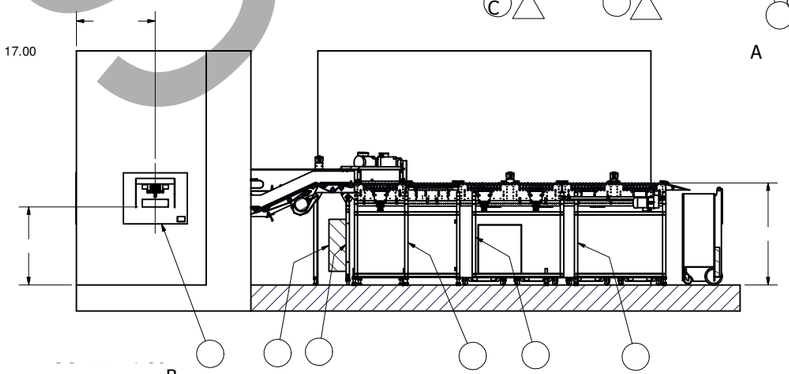

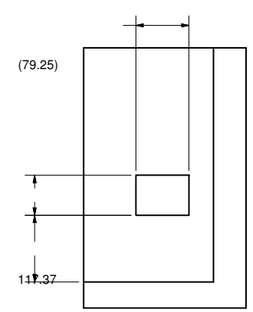

Sample

techlogic

9-Bin RFID AST System